INSTALLATION, OPERATION, AND MAINTENANCE MANUAL

WELKER® HEATED DEHYDRATION ASSEMBLY

MODEL
HDA

DRAWING NUMBER
AD079CR
AD079CT

MANUAL NUMBER
IOM-162

REVISION
Rev. A, 11/13/2023

TABLE OF CONTENTS

IMPORTANT SAFETY INFORMATION
READ ALL INSTRUCTIONS

	Notes emphasize information and/or provide additional information to assist the user.
	Caution messages appear before procedures that could result in damage to equipment if not observed.
STOP	Warning messages appear before procedures that could result in personal injury if not observed.

This manual is intended to be used as a basic installation and operation guide for the Welker® Heated Dehydration Assembly, HDA. For comprehensive instructions, please refer to the IOM Manuals for each individual component. A list of relevant component IOM Manuals is provided in Appendix A of this manual.

The information in this manual has been carefully checked for accuracy and is intended to be used as a guide for the installation, operation, and maintenance of the Welker® equipment described in this manual. Correct installation and operation, however, are the responsibility of the end user. Welker® reserves the right to make changes to this manual and all products in order to improve performance and reliability.

BEFORE YOU BEGIN

Read these instructions completely and carefully.

IMPORTANT – Save these instructions for local inspector's use.

IMPORTANT – Observe all governing codes and ordinances.

Note to Installer – Leave these instructions with the end user.

Note to End User – Keep these instructions for future reference.

Installation of this Heated Dehydration Assembly is of a mechanical and electrical nature.

Proper installation is the responsibility of the installer. Product failure due to improper installation is not covered under the warranty.

If you received a damaged Heated Dehydration Assembly, please contact a Welker® representative immediately.

Phone: 281.491.2331
Address: 13839 West Bellfort Street
Sugar Land, TX 77498

SECTION 1: PRODUCT INFORMATION

1.1 Introduction

We appreciate your business and your choice of Welker® products. The installation, operation, and maintenance liability for this equipment becomes that of the purchaser at the time of receipt. Reading the applicable *Installation, Operation, and Maintenance* (IOM) *Manuals* prior to installation and operation of this equipment is required for a full understanding of its application and performance prior to use.*

If you have any questions, please call Welker® at 1.281.491.2331.

**The following procedures have been written for use with standard Welker parts and equipment. Assemblies that have been modified may have additional requirements and specifications that are not listed in this manual.*

1.2 Product Description

The Welker® *HDA* Heated Dehydration Assembly is designed to filter, dry, heat, and regulate natural gas for use as a pneumatic instrument supply. The instrument supply is conditioned by two (2) Welker® Filter Dryers, which remove unwanted elements, a catalytic heater, which heats the supply to the desired temperature, and two (2) regulators, which reduce the pressure of the supply to a pressure adequate for downstream instrumentation. The HDA is also equipped with a pressure gauge so an operator can monitor the outlet pressure of the instrument supply and a Welker® Relief Valve to protect downstream instrumentation from overpressurization.

Welker® may custom design the HDA to suit the particular application and specifications of each customer.

1.3 Specifications

The specifications listed in this section are generalized for this equipment. Welker can modify the equipment according to your company's needs. **Please note that the specifications may vary depending on the customization of your equipment.**

Table 1: HDA Specifications	
Product	Natural Gas
Materials of Construction	316/316L Stainless Steel, Brass (Buyout Regulator), Buna, and Carbon Steel
Maximum Allowable Operating Pressure	**Welker® Regulator:** 1500 psig @ -20 °F to 120 °F (*103 barg @ -28 °C to 48 °C*) **Buyout Regulator:** 1500 psig @ 0 °F to 120 °F (*103 barg @ -17 °C to 48 °C*)
Connections	**Filter Drains:** ¼" FNPT **Inlet:** ¼" FNPT or ½" FNPT **Outlet:** ¼" FNPT or ½" FNPT **Relief Outlet:** ½" FNPT or 1" FNPT
Output Range	**Welker® Regulator:** 75–200 psig (5–13 barg) **Buyout Regulator:** 0–125 psig (0–8 barg)
Electrical Connections	AC 120 V DC 12 V
Nominal Filter Rating	3 Micron
Filter Media	⅔ Silica Gel, ⅓ Activated Charcoal 100% Silica Gel
Operation	**Catalytic Heater:** Pilot-Operated **Regulator:** Diaphragm-Operated
Features	Dual Coil Catalytic Heater Mounting Stand Outlet Pressure Gauge Two (2) Regulators Two (2) Welker® Filter Dryers Welker® Relief Valve
Catalytic Heater Option	CSA Approval

1.4 Equipment Diagrams

Figure 1: Connections Diagram – HDA With Welker® Regulators and Bruest Catalytic Heater

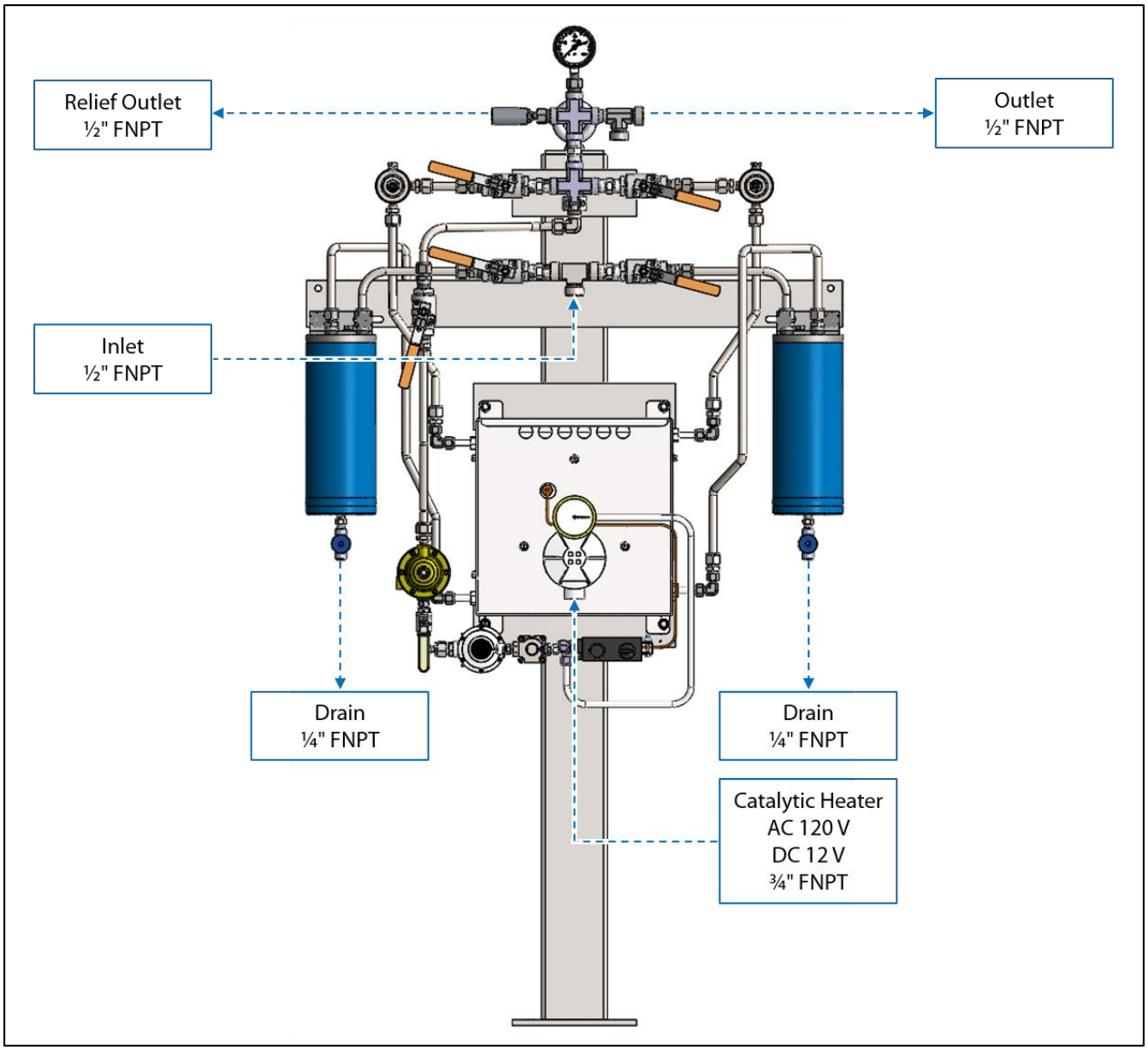

Figure 2: Connections Diagram – HDA With Buyout Regulators and CATCO Catalytic Heater

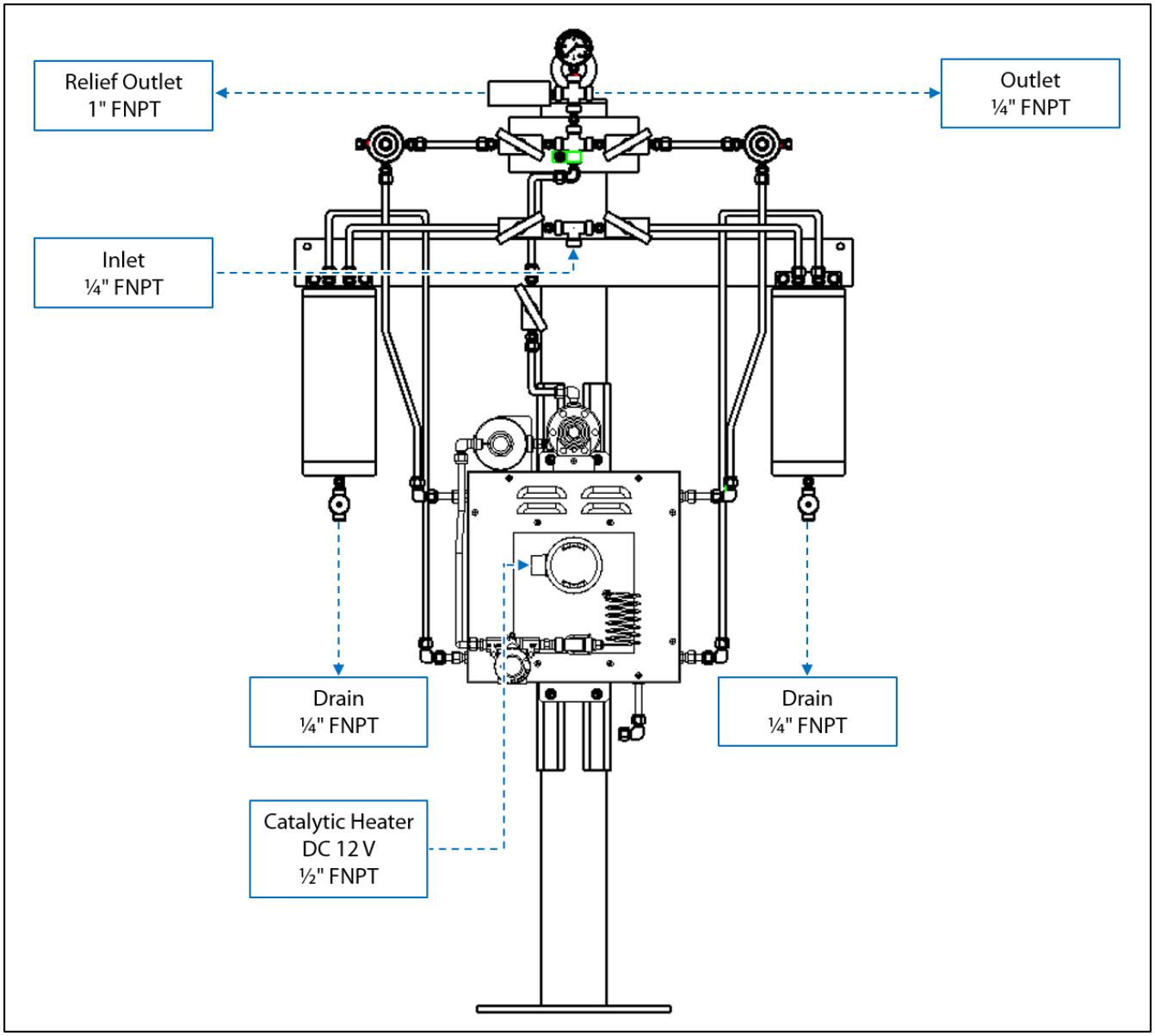

Figure 3: HDA With Welker® Regulators and Bruest Catalytic Heater

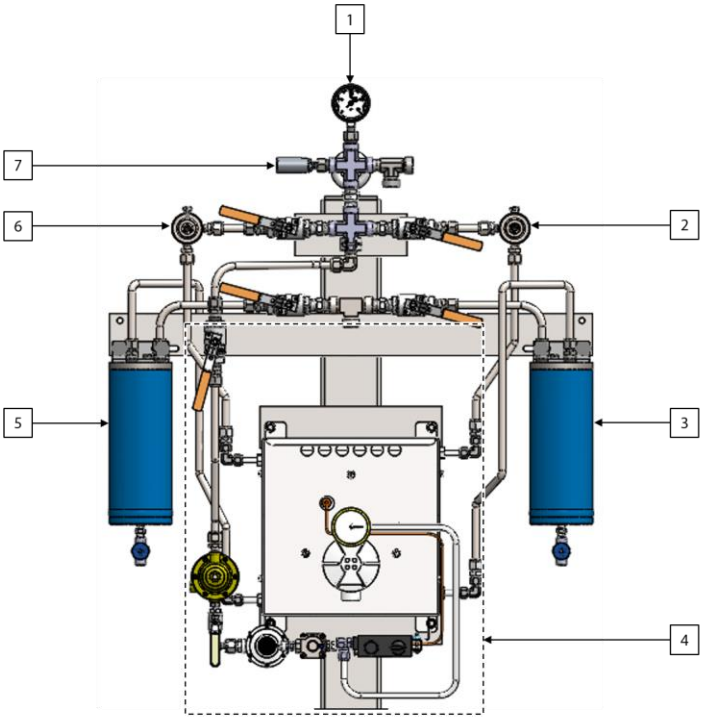

No.	Description
1	Outlet Pressure Gauge
2	Welker IR-4 Instrument Regulator
3	Welker F-4 Filter Dryer (Right Filter)
4	Bruest Catalytic Heater Subassembly (See *Figure 9*)
5	Welker F-4 Filter Dryer (Left Filter)
6	Welker IR-4 Instrument Regulator
7	Welker RV-1 Relief Valve

Figure 4: HDA With Buyout Regulators and CATCO Catalytic Heater

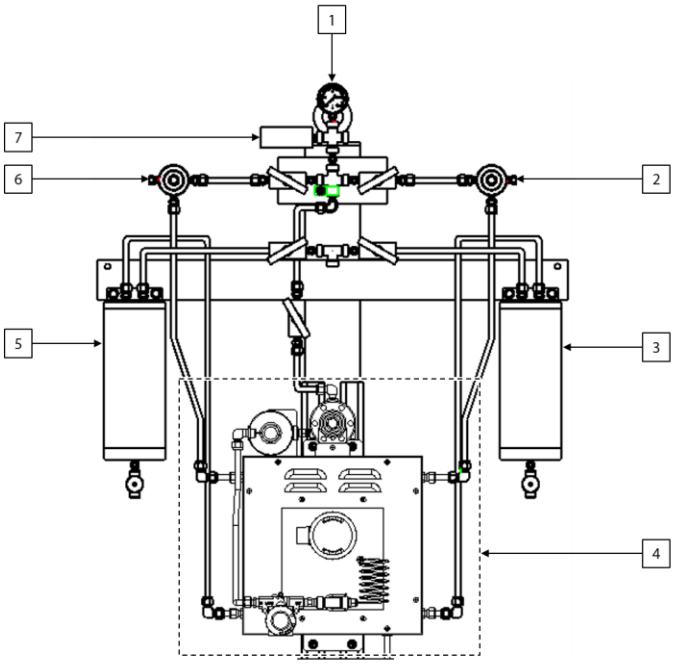

No.	Description
1	Outlet Pressure Gauge
2	Instrument Regulator
3	Welker F-5 Filter Dryer (Right Filter)
4	CATCO Catalytic Heater Subassembly (See *Figure 10*)
5	Welker F-5 Filter Dryer (Left Filter)
6	Instrument Regulator
7	Welker RV-3 Relief Valve

Figure 5: HDA With Welker Regulators and Bruest Catalytic Heater Valve Diagram

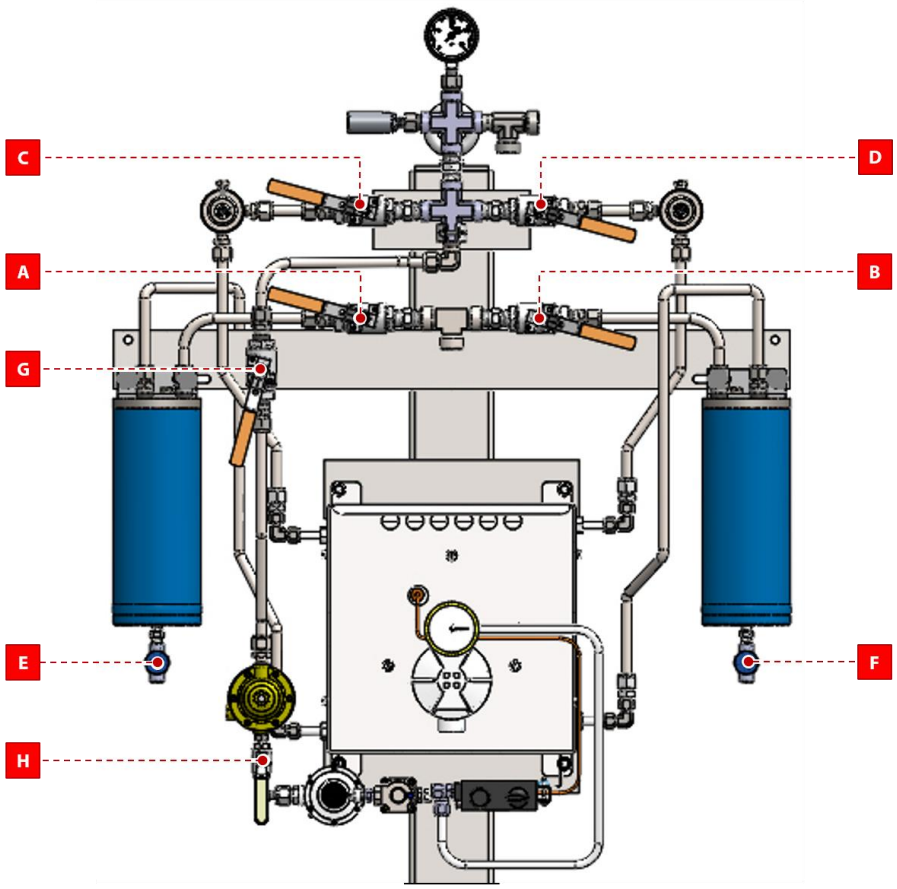

No.	Description
A	Left Filter Inlet Valve
B	Right Filter Inlet Valve
C	Left Filter Outlet Valve
D	Right Filter Outlet Valve
E	Left Filter Drain Valve
F	Right Filter Drain Valve
G	Catalytic Heater Fuel Inlet Valve
H	Shutoff Valve

Figure 6: HDA With Buyout Regulators and CATCO Catalytic Hea

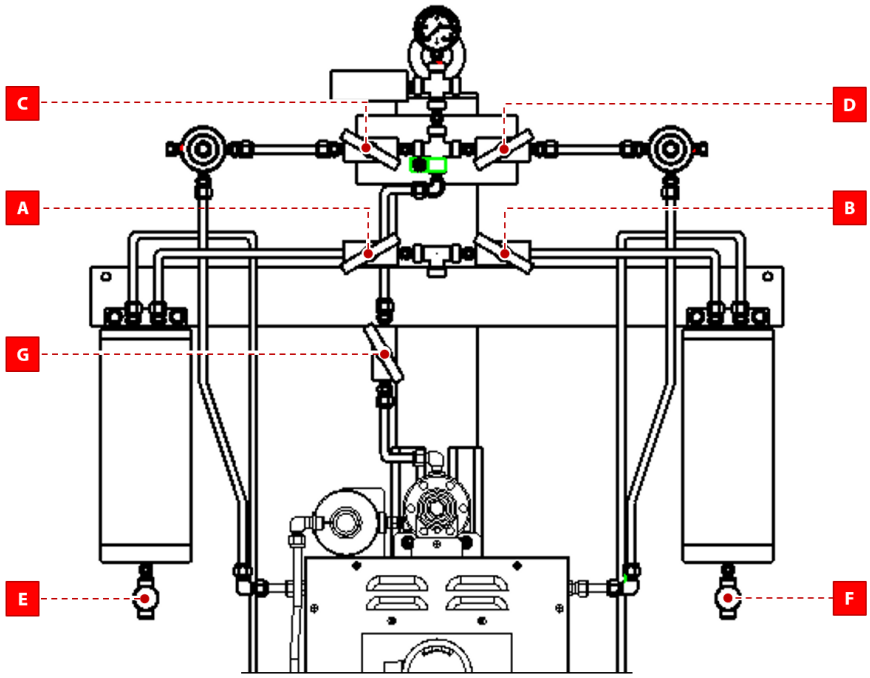

No.	Description
A	Left Filter Inlet Valve
B	Right Filter Inlet Valve
C	Left Filter Outlet Valve
D	Right Filter Outlet Valve
E	Left Filter Drain Valve
F	Right Filter Drain Valve
G	Catalytic Heater Fuel Inlet Valve

SECTION 2: INSTALLATION & OPERATION

2.1 Before You Begin

After unpacking the unit, check the equipment for compliance and any damage that may have occurred during shipment. Immediately contact a Welker representative if you received damaged equipment.

When sealing fittings with PTFE tape, refer to the proper sealing instructions for the brand used.

2.2 Installation and Operation

1. Secure the mounting stand according to the applicable bolt pattern to the floor or ground (*Figure 7* or *Figure 8*).

Figure 7: 6" x 8" Bolt Pattern

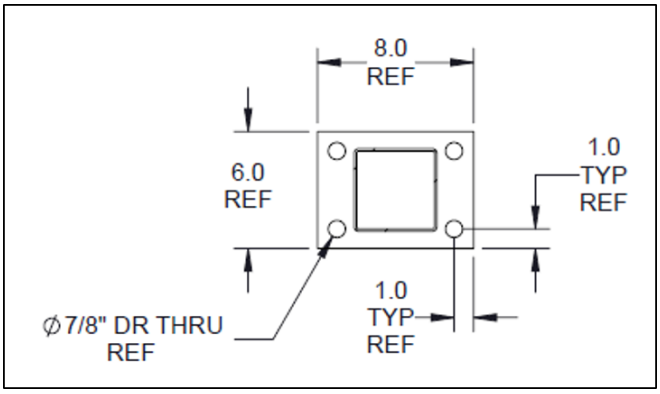

Figure 8: 12" x 12" Bolt Pattern

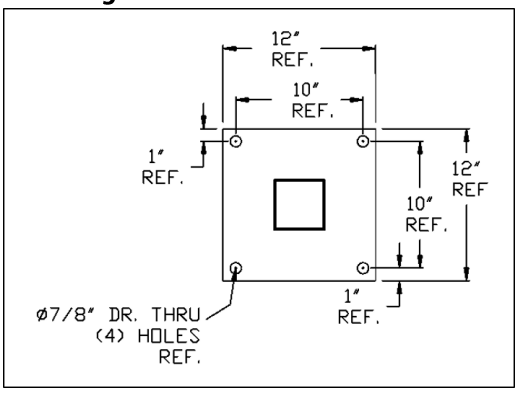

2. Ensure that all valves on the HDA are closed (*Figure 5* or *Figure 6*).
3. To prevent overpressurization of the downstream instrument, close the two (2) instrument regulators completely (*Figure 3* or *Figure 4*).
4. Using appropriately sized customer-supplied tubing, connect the inlet of the HDA to a pressurized natural gas source (*Figure 1* or *Figure 2*).
5. Using appropriately sized customer-supplied tubing, connect the outlet of the HDA to the inlet port of the instrument to be supplied with the conditioned natural gas (*Figure 1* or *Figure 2*).

6. Connect from the catalytic heater to an appropriate power supply (i.e., AC 120 V or DC 12 V) (*Figure 1* or *Figure 2*). Refer to the *Installation, Operation, and Maintenance* (IOM) *Manual* for the catalytic heater for wiring instructions.
7. Open the valve of the pressurized natural gas supply source to begin supplying flow to the HDA.
8. Open left filter inlet valve A, right filter inlet valve B, left filter outlet valve C, and right filter outlet valve D (*Figure 5* or *Figure 6*).
9. Set the two (2) instrument regulators to the desired output pressure appropriate for the instrument to be supplied with the conditioned natural gas (*Figure 3* or *Figure 4*). Refer to the *Installation, Operation, and Maintenance* (IOM) *Manual* for the applicable regulator for instructions on setting the regulator.
10. Set the Welker Relief Valve approximately 5 to 10 psig above the set point of the instrument regulators (*Figure 3* or *Figure 4*). Refer to the *Installation, Operation, and Maintenance* (IOM) *Manual* for the Relief Valve for instructions on setting the relief.
11. Check for leaks and repair as necessary.

Catalytic Heater Start-Up

If the HDA is equipped with a Bruest catalytic heater, continue to step 12.
If the HDA is equipped with a CATCO catalytic heater, proceed to step 22.

Bruest Heater

Figure 9: Bruest Catalytic Heater Subassembly Diagram

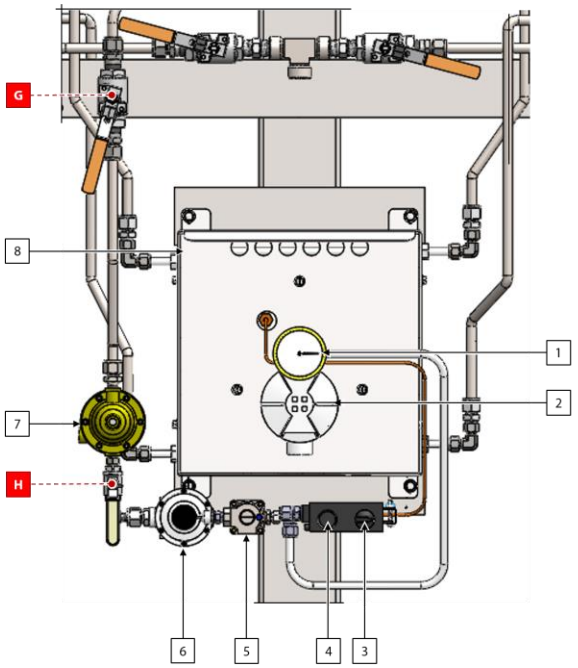

No.	Description
1	Water Column Gauge
2	Terminal Housing
3	Operating Knob
4	Temperature Knob
5	Gas Pressure Regulator
6	Low Pressure Regulator
7	High Pressure Regulator
8	Catalytic Heater
G	Catalytic Heater Fuel Inlet Valve
H	Shutoff Valve

12. Open catalytic heater fuel inlet valve G and shutoff valve H, if applicable (*Figure 5* or *Figure 9*).
13. Turn ON electrical power to the catalytic heater and wait approximately twenty (20) minutes for the catalytic heater to start up.

In cold weather, it might take longer for the catalytic heater to start up.

14. Turn the temperature knob to the highest setting.
15. Turn the operating knob to IGN.
16. Push down on the operating knob, turn to PILOT, and then hold for ten (10) seconds.
17. Release the operating knob, and then turn it to ON.
18. Allow the catalytic heater to run on the highest setting for approximately fifteen (15) minutes.
19. Turn OFF electrical power to the catalytic heater.
20. Turn the temperature knob to the desired setting. As necessary, wait for the catalytic heater to reach the desired temperature.
21. Proceed to step 27 to complete start-up.

CATCO Heater

Figure 10: CATCO Catalytic Heater Subassembly Diagram

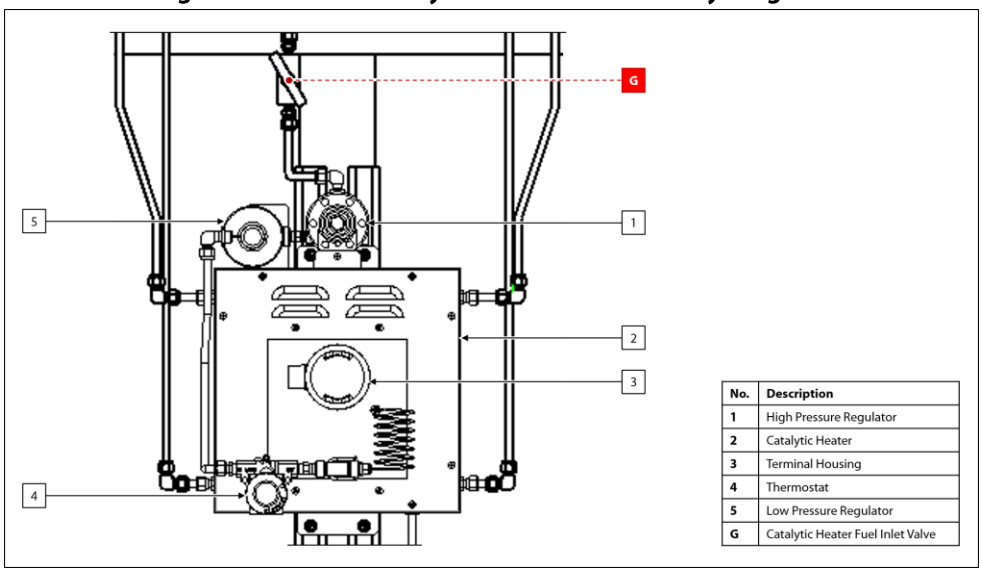

No.	Description
1	High Pressure Regulator
2	Catalytic Heater
3	Terminal Housing
4	Thermostat
5	Low Pressure Regulator
G	Catalytic Heater Fuel Inlet Valve

22. Turn ON electrical power to the catalytic heater and wait approximately fifteen (15) minutes for the catalytic heater to start up.

> In cold weather, it might take longer for the catalytic heater to start up.

23. Open catalytic heater fuel inlet valve G (*Figure 6* or *Figure 10*).
24. Allow the catalytic reaction to become fully established, as indicated by a rapid rise in face temperature and the emission of hot gases. This will take approximately five to ten (5–10) minutes.
25. Once the catalytic reaction has been fully established, turn OFF electrical power to the catalytic heater.

> If jumper cables were used, disconnect the cables from the power supply prior to disconnecting the cables from the catalytic heater.

26. Continue to step 27 to complete start-up.

Completing Start-Up

27. If a valve is installed between the HDA and the instrument to be supplied with the conditioned natural gas, open that valve to allow the conditioned natural gas to reach the instrument.
28. The HDA is now operational. Normal operation will continue as long as conditioned fuel gas is supplied to the catalytic heater.

> f a pressure drop on the outlet pressure gauge is noticed, it may be an indication that the filters are not functioning. Maintenance on the filters may be required.

3.1 Before You Begin

1. **Welker® recommends that the unit have standard yearly maintenance under normal operating conditions.** In cases of severe service, dirty conditions, excessive usage, or other unique applications that may lead to excess wear on the unit, a more frequent maintenance schedule may be appropriate.
2. Prior to maintenance or disassembly of the unit, it is advisable to have a repair kit available for repairs of the system in case of unexpected wear or faulty seals.

New seals supplied in spare parts kits should be lightly lubricated before being installed to ease the installation of the seals and reduce the risk of damage when positioning them on parts. Wipe excess lubricant from the seals, as it may adversely affect analytical instrument results.

For sample-exposed seals, Welker® recommends non-hydrocarbon-based lubricants, such as Krytox®.
For non-sample-exposed seals, Welker recommends either non-hydrocarbon-based lubricants or silicone-based lubricants, such as Molykote® 111.

After the seals are installed, the outer diameter of shafts and inner diameter of cylinders may be lubricated to allow smooth transition of parts.

3. All maintenance and cleaning of the unit should be performed on a smooth, clean surface.
4. Welker® recommends having the following tools available for maintenance. Please note that the exact tools required may vary by model.
    a. Adjustable Wrench
    b. Anti-galling Compound or Thread Lubricant
    c. Flat Head Screwdriver
    d. Hex Key Set
    e. Large Rubber Pipe Wrench
    f. Seal Pick

3.2 Maintenance

1. Determine how quickly free liquids accumulate in both filters by frequently opening left filter drain valve E and right filter drain valve F (*Figure 5* or *Figure 6*).
2. Halt all operations of the HDA.
3. Close all valves (*Figure 5* or *Figure 6*).
4. If performing maintenance on an HDA with Bruest catalytic heater, turn the operating knob to OFF (*Figure 9*).

> **STOP** The HDA will be HOT after use. All an appropriate amount of time for the unit to cool down prior to performing maintenance.

5. Slowly open left filter drain valve E and right filter drain valve F to vent any pressure remaining in the filters (*Figure 5* or *Figure 6*).

> **STOP** The filters must be depressurized prior to performing maintenance on the HDA.

<u>Left Filter Maintenance</u>

Figure 11: Filter Detail

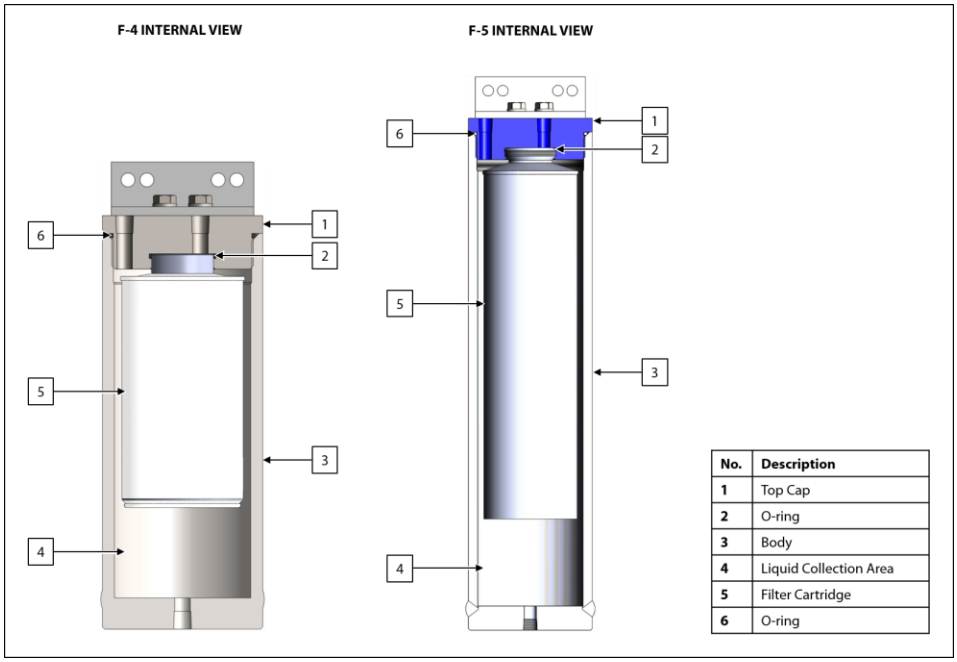

No.	Description
1	Top Cap
2	O-ring
3	Body
4	Liquid Collection Area
5	Filter Cartridge
6	O-ring

6. Unscrew the body of the left filter from the top cap.
7. If necessary, replace the O-rings in the top cap.
8. Remove and replace the filter cartridge.
9. Apply a small amount of anti-galling compound or thread lubricant to the top cap threads.
10. Screw the body onto the top cap.
11. Maintenance may now be performed on the left regulator. Refer to the *Installation, Operation, and Maintenance* (IOM) *Manual* for the appropriate regulator for maintenance instructions.
12. Close left filter drain valve E (*Figure 5* or *Figure 6*).
13. Leak check the seal between the body and the top cap on the left filter to ensure that a tight seal has been formed.

Right Filter Maintenance

14. Unscrew the body of the right filter from the top cap (*Figure 11*).
15. If necessary, replace the O-rings in the top cap (*Figure 11*).
16. Remove and replace the filter cartridge (*Figure 11*).
17. Apply a small amount of anti-galling compound or thread lubricant to the top cap threads.
18. Screw the body onto the top cap (*Figure 11*).
19. Maintenance may now be performed on the right regulator. Refer to the *Installation, Operation, and Maintenance* (IOM) *Manual* for the appropriate regulator for maintenance instructions.
20. Close right filter drain valve F (*Figure 5* or *Figure 6*).
21. Leak check the seal between the body and top cap on the right filter to ensure that a tight seal has been formed.

Subcomponent Maintenance

22. Maintenance may now be performed on the Welker® Relief Valve. Refer to the *Installation, Operation, and Maintenance* (IOM) *Manual* for the Relief Valve for maintenance instructions.
23. If necessary, maintenance may now be performed on the catalytic heater subassembly. Refer to the *Installation, Operation, and Maintenance* (IOM) *Manuals* for the appropriate catalytic heater subassembly components for maintenance instructions.
24. Maintenance is now complete. See *Section 2.2, Installation and Operation*, for instructions on returning the HDA to operation.

3.3 Troubleshooting Guidelines

Table 2: Troubleshooting Guidelines		
Issues	**Possible Causes**	**Solutions**
Supply from the HDA has dropped or is insufficient.	The inlet and outlet valves of the HDA are not open or are not open fully.	Fully open left filter inlet valve A, right filter inlet valve B, left filter outlet valve C, and right filter outlet valve D (*Figure 5* or *Figure 6*).
	The regulators are set too low.	Refer to the *Installation, Operation, and Maintenance* (IOM) *Manual* for the appropriate regulator for instructions on adjusting the regulators.
	The left and/or right filter is clogged or filled with liquid.	Open the drain valve on each filter to drain any accumulated free liquids (*Figure 5* or *Figure 6*).
The catalytic heater is not operating.	The catalytic heater is not receiving fuel gas.	Open catalytic heater fuel inlet valve G and shutoff valve H, if applicable (*Figure 5* or *Figure 6*).
	The catalytic heater was not properly started up.	Repeat the appropriate catalytic heater start-up instructions in *Section 2.2, Installation and Operation.*

APPENDIX A: REFERENCED OR ATTACHED DOCUMENTS

Welker® *Installation, Operation, and Maintenance* (IOM) *Manuals* suggested for use with this unit:

- IOM-025: Welker® RV-1, RV-2, RV-2CP, and RV-3 Relief Valves
- IOM-033: Welker® RV-1, RV-2, RV-2CP, and RV-3 Relief Valves
- IOM-046: Welker® F-4 Filter Dryer
- IOM-105: Welker® NV-1 and NV-2 Instrument Valves
- IOM-169: Welker® F-5 Filter Dryer

Other *Installation, Operation, and Maintenance* (IOM) *Manuals* suggested for use with this unit:

- Anderson Greenwood Soft Seated Hand Valves H1 Series (Welker® IOM-V192)
- Catalytic Industrial Group, Inc. Bruest Catalytic Heaters (Welker® IOM-V005)
- CATCO Catalytic Heater Company CATCO Catalytic Heaters (Welker® IOM-V081)
- Emerson Process Management Regulator Technologies, Inc. Fisher™ 1301 Series High-Pressure Regulators Types 1301F and 1301G (Welker® IOM-V107)
- Velan Inc. Memoryseal® Resilient-seated Ball Valves (Welker® IOM-V354)
- Victor Equipment Company Meco Type P Industrial Regulators (Welker® IOM-V079)
- WIKA Instrument Corporation Bourdon Tube Pressure Gauges Type 232.53 and Type 233.53 (Welker® IOM-V171)

Welker® drawings and schematics suggested for use with this unit:

- Assembly Drawing: AD079CR (HDA With Bruest Catalytic Heater)
- Assembly Drawing: AD079CT (HDA With CATCO Catalytic Heater)

NOTES

13839 West Bellfort Street
Sugar Land, TX 77498
Phone: 281.491.2331

welker.com